SIMPLE AUTOMATIC WATER-LEVEL CONTROLLER

■ SUNIL KUMAR

Water-level controllers are common nowadays. The one described here is built around timer NE555 and inverter buffer CMOS IC CD4049. It uses readily-available, low-cost components, and is easy to build and install on the over-head tank (OHT) to prevent wastage of water.

The circuit works off a 12V battery or 230V AC mains using a 12V adaptor. The three sensors built from non-corrosive metal are fitted to the OHT as shown in Fig. 2 and connected to the circuit (Fig. 1) at appropriate terminals. Power supply terminal Vcc is at the bottom of the tank, sensor terminal L is just above the bottom of the tank and sensor terminal H is at the top of the tank. After you have properly installed the sensors in the OHT and connected the power supply, the circuit is ready to use.

Since Vcc terminal is at the bottom of the tank, when the water level falls below sensor L, timer IC2 is triggered at pin 2 via inverters N1 and N2 and its output goes high. As a result, the output of timer IC2 goes high. Relay RL1 energises and the motor starts filling water in the tank. The motor remains 'on' even when the water level crosses sensor L.

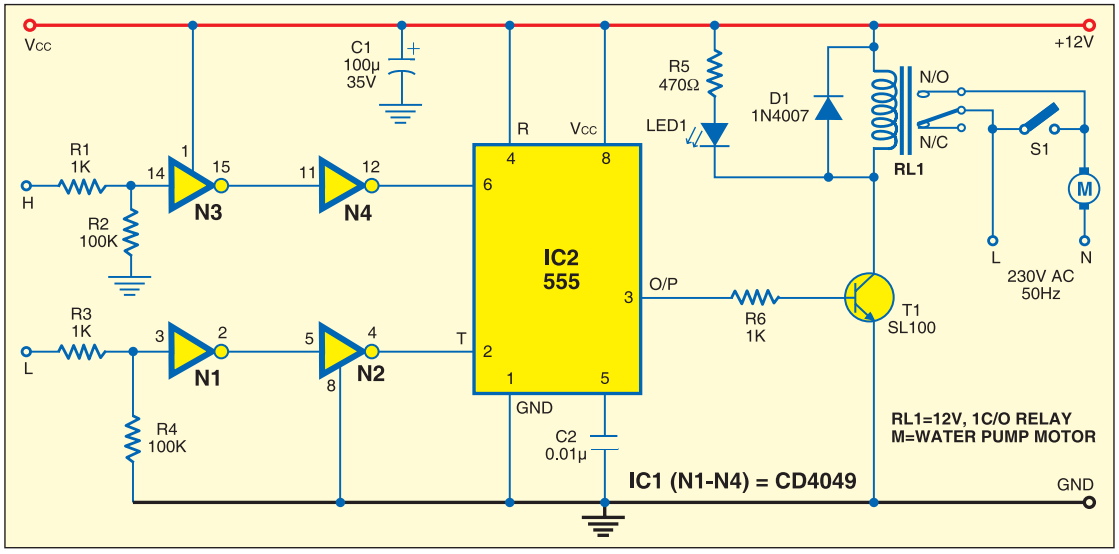

Fig. 1: Simple water level controller

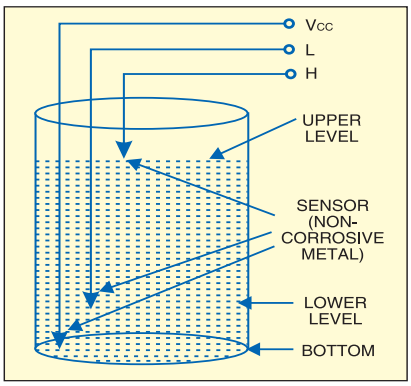

Fig. 2: Sensor installation in the overhead tank (OHT)

As water in the tank rises to touch sensor H, timer IC2 is re-triggered at pin 6 via inverters N3 and N4 and as a result, its output goes low. The relay de-energises and the motor stops filling water in the tank. The motor remains 'off' even when the water level falls below sensor H.

As water is consumed and its level falls below sensor L, the motor restarts. Thereafter, the cycle repeats.

You can also manually start and stop the motor using switch S1. ●